SNAPPER®

#6-1824 & #6-1857 GRASS CATCHER KITS for SNAPPER 19" & 21" STEEL DECK WALK BEHIND MOWERS

INSTALLATION INSTRUCTIONS

This kit includes a grass catcher bag and an adapter for installing in place of the side discharge or mulching cover on 19" & 21" Walk Behind Mowers. Install the kit as follows:

⚠ CAUTION ⚠
Stop engine before installing this kit or performing any service on this mower.

STEP 1: Remove the side discharge chute or mulching cover by removing the retaining hardware. See Figure 1. Save the chute or cover for later use. Save hardware for securing the adapter. NOTE: If wing nuts were used, replace these with Snapper part number 9-0951 flanged lock nuts for improved retention.

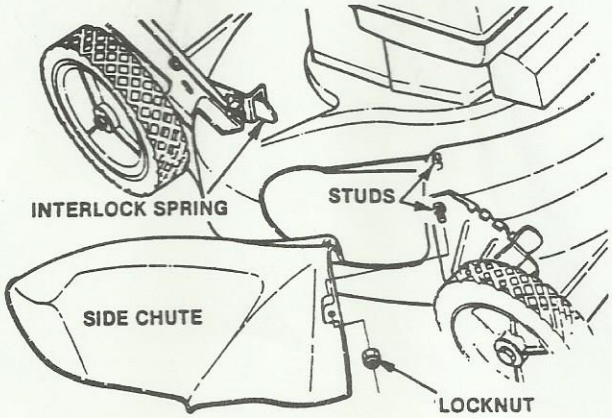

FIGURE 1

STEP 2: Guide the adapter in from the side of the mower deck until the stud located behind the right front wheel protrudes through the raised boss on the front edge of adapter. Secure here with hardware, but do not tighten at this time. See Figure 2.

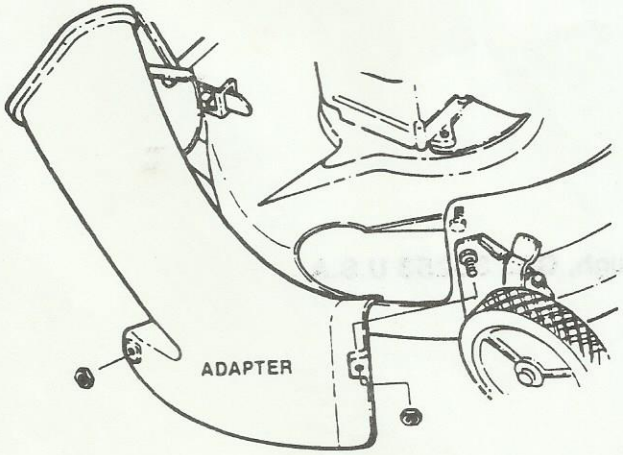

FIGURE 2

STEP 3: Rotate and push the rear edge of the adapter in from the side until the slot on front inside edge of adapter slides around the stud on top of deck.

STEP 4: Push the lower rear edge of the adapter in over the stud protruding from the rear side of the mower deck and secure here with hardware. Install hardware on the stud on top of deck then securely tighten the retaining nuts at all three points.

NOTE: Certain models have an interlock spring. Make sure the gusset on the inside rear edge of the adapter has engaged the interlock spring and has pushed the spring inward. If this spring remains outside the gusset, the interlock will prevent engine from starting.

STEP 5: The grass catcher can now be installed. Slide the connector over the adapter and hook upper handles over the middle handle of the mower as shown in Figure 3.

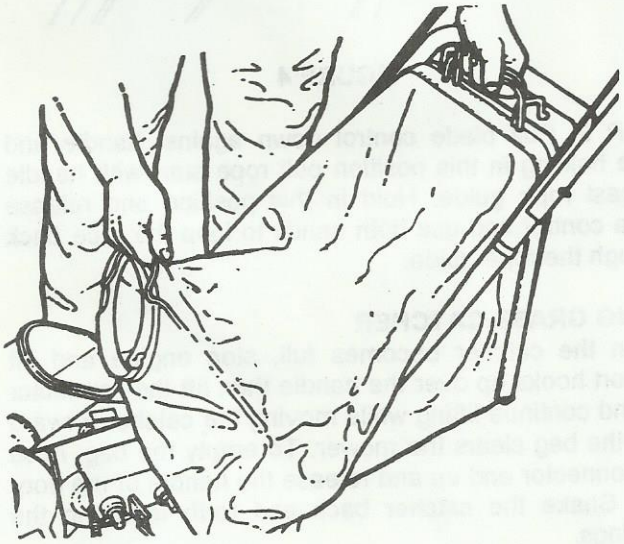

FIGURE 3

NOTE: Some models have the rope start handle mounted with a rope guide on the upper handle. The rope guide will have to be relocated to the opposite side of the upper handles. On these models continue with STEP 6.

STEP 6: Pull blade control down against handle and while holding in this position unwrap rope from rope guide. Rope and handle will sometimes partially retract back into engine. Release blade control.

STEP 7: Remove rope guide from side of handle. Reinstall mounting as this secure throttle control.

(Over)

STEP 8: Remove the upper bolt, nut and washer from the speed control bracket. Install rope guide onto the inside of upper handles. Secure guide onto the speed control bracket using bolt, washer and nut. Tighten bolts and nuts securely. See Figure 4.

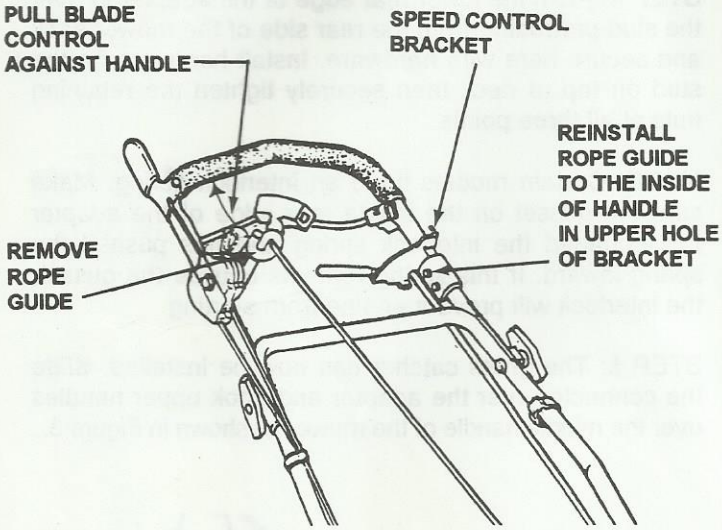

FIGURE 4

STEP 9: Pull blade control down against handle and while holding in this position pull rope start with handle up past rope guide. Hold in this position and release blade control and use both hands to loop the rope back through the rope guide.

USING GRASS CATCHER

When the catcher becomes full, stop engine and lift support hooks up over the handle then lift the connector off and continue lifting while moving the catcher forward until the bag clears the mower. To empty the bag, raise the connector end up and release the handle of the door flap. Shake the catcher back and forth to dump the clippings.

SNAPPER® McDonough, GA., 30253 U.S.A.

INSTRUCTION No. 2-9962 (I.R. 2/96)